GARNET Mini

3 Axis CNC Compact Processing Center

FEATURES

Compact milling center on the 3 surfaces of the aluminum and plastic profiles, with parametric program templates, developed to perform operations such as lock, handle, hinge, latch slot and opening processes.

- 10'' Touchscreen
- Easy to program user interface
- Easy profile positioning with gauge and laser marking
- Spindle motors running independently on 3 different surfaces

STANDARD EQUIPMENT

- Spray-Cooling system
- Horizontal and vertical pneumatic clamps (2 pcs top, 2 pcs front)
- 3 piece 6mm milling cutters
- Right and left profile gauge
- Laser marking

OPTIONAL EQUIPMENT

- 5, 6, 6, 8 and 10 mm milling cutters
- Servo Control Profile Support (Comet GM-Comet Plus)
- 45° Water Slot

YouTube

WEB

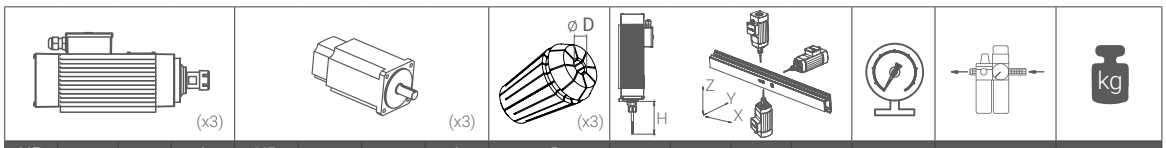

HP kW	n	Hz	I (230 V)	HP kW	n	Hz	I (230 V)	ø D max.	H	X	Y	Z	Air Pressure	Air Consumption	Gross Net
4 3	18000 r.p.m	300	7 A	1 0,75	3000 r.p.m	50	4,6 A	13 mm	118 mm	350 mm	150 mm	120 mm	6 - 8 bar	40 L / dk.	1000 kg 800 kg

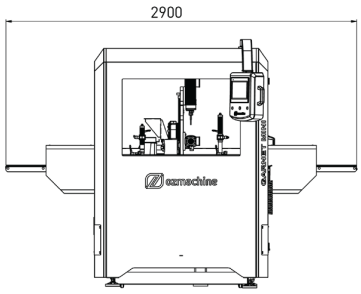

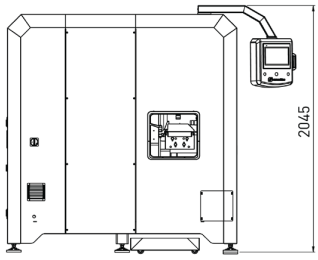

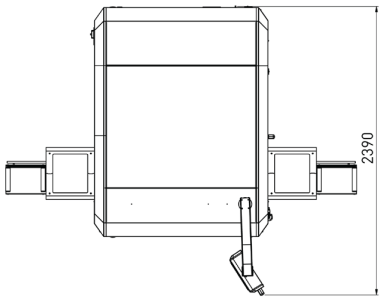

+90 0216 304 20 10 info@ozcelik.com Anadolu Mh. Kanuni Cd. 8, 34956 Tuzla, İSTANBUL - TÜRKİYE

© OZ Machine I Ocak 2025

PRODUCT WEB LINK

GARNET Mini

3 Axis CNC Compact Processing Center

özçelik

MACHINING LENGTHS	
X Axis (Longitudinal)	350 mm
Y Axis (Lateral)	150 mm
Z Axis (Vertical)	120 mm

POSITIONING SPEED	
X Axis (Longitudinal)	30 m/min
Y Axis (Lateral)	30 m/min
Z Axis (Vertical)	30 m/min

AIR	
Pressure	6-8 Bar
Consumption	40 L / min

ELECTRICAL	
Maximum power	12 kW
Voltage	400V 3P, PE AC
Frequency	50-60 Hz

SPINDLE	
Spindle with cooling fan	3
Maximum power	3 kW
Maximum rotation speed	18.000 rpm
Tool holder	ER 20

PROFILE POSITIONING	
Right and left profile gauge	●
Laser marking	●

PROFILE TIE-DOWN MEASUREMENTS	
Xmax / Xmin (Longitudinal)	- / 660 mm
Ymax / Ymin (Lateral)	150 mm / -
Zmax/ Zmin (Vertical)	120 mm / -

CONTROL UNIT	
Touchscreen	10”
Data transfer via USB	●
Smart CAM post processing	○

OPERATIONAL AREA	
Clamps, standard quantity	4
Automatic Tool cooling system	●
Guard cabin for machining area	●

● Standard ○ Opsiyonal

Özçelik Makina continuously improves its products and offers new and modern solutions for PVC and Aluminum Profile Processing. Accordingly, Özçelik reserves the right to change the information in this document without notice. All dimensions and weights are reference values. Valid from January 2025